Drinking Fountain
5 Brearley Court, Baird Road Waterwells Business Park Gloucester GL2 2AF
Phone: 01275 400456
Web: https://www.drinking-fountain.co.uk
Email: sales@drinking-fountain.co.uk

Combined Drinking Fountain & Bottle Filler- Adult Height (Non-Chilled)



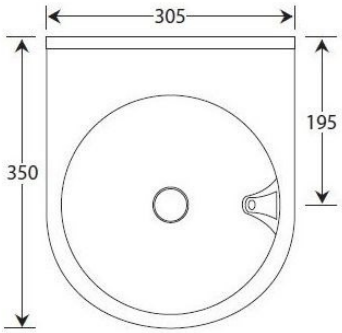

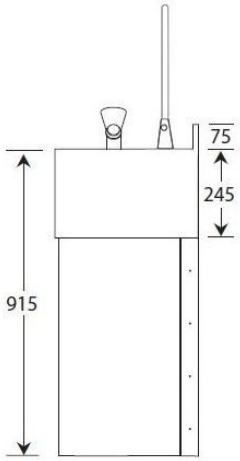

Product Code: DFBFFS-A

Combined Drinking Fountain & Bottle Filler-Adult Height

Product Code DFBFFS-A

The WRAS compliant floor standing adult height drinking water fountains are wall and floor mounted and provide a strong, attractive, easily cleaned solution for delivering drinking water via a bubbler tap or bottle filling tap. The floor standing design helps make the unit vandal resistant whilst concealing the waste and water supply pipework, providing a neat, safe installation.

The water bubbler tap and bottle filling tap has been tested and approved by the Water Research Advisory Scheme to ensure it complies with the Water Supply (Water Fittings) Regulations or Scottish Byelaws. The press button time flow bubbler tap is located away from the back wall making it easier for the user to bend down to drink. The self-closing valve helps prevents water wastage.

The smooth radius design helps prevent injury from sharp corners, and along with the 75mm rear upstand aids cleaning which improves hygiene. The compact design allows the fountain to be easily installed at any suitable location.

Manufactured from 1.6mm thick grade 304 stainless steel with a full height shroud, the WRAS approved drinking water fountain is very robust. The fully removable shroud conceals the waste and supply pipework for extra vandal resistance and safety, and is retained by security screws. Polished to a satin finish, the adult height fountain is easily maintained ensuring a long-lasting finish.

To ensure the proper functioning and longevity of this unit, a Y-strainer or filter must be installed as part of the water supply system. The Y-strainer / filter is essential for protecting the internal components and maintaining the correct flow characteristics of the tap. Failure to install a Y-strainer or filter will result in the warranty being void.

Dimensions & Specifications:

Width: 305mm.
Depth: 350mm from wall.
Height: 915mm plus 75mm rear upstand.

Material: 1.6mm thick - grade 304 stainless steel.

Bubbler tap: WRAS approved bubbler tap
Bottle filling tap: WRAS approved bottle filling tap

Recommended Mounting Heights For Drinking Fountains:

Adult: 900 to 915mm.
Junior: 762mm.
Infant: 690mm.
Secondary: 860mm.

Supplied With:

Integral wall and floor fixing brackets.
32mm flush grated waste fitting.
WRAS approved chrome plated bubbler and bottle filling taps with self-closing valve and 15mm water pipe compression coupler.

Delivery:

Usually delivered in one to two working days.

Optional Fountain Extras:

32mm McAlpine plastic bottle trap.

**All pictures shown are for illustration purpose only and may be subject to change without notice. Actual product may vary due to product enhancement.
All dimensions shown are for guidance only and may be subject to change or alteration without notice. All items manufactured or purchased separately from a third party to fit our products should be checked against the actual dimensions of the physical product before purchase. We will not be liable for third party costs and consequential loss associated with the items not fitting third party components.**